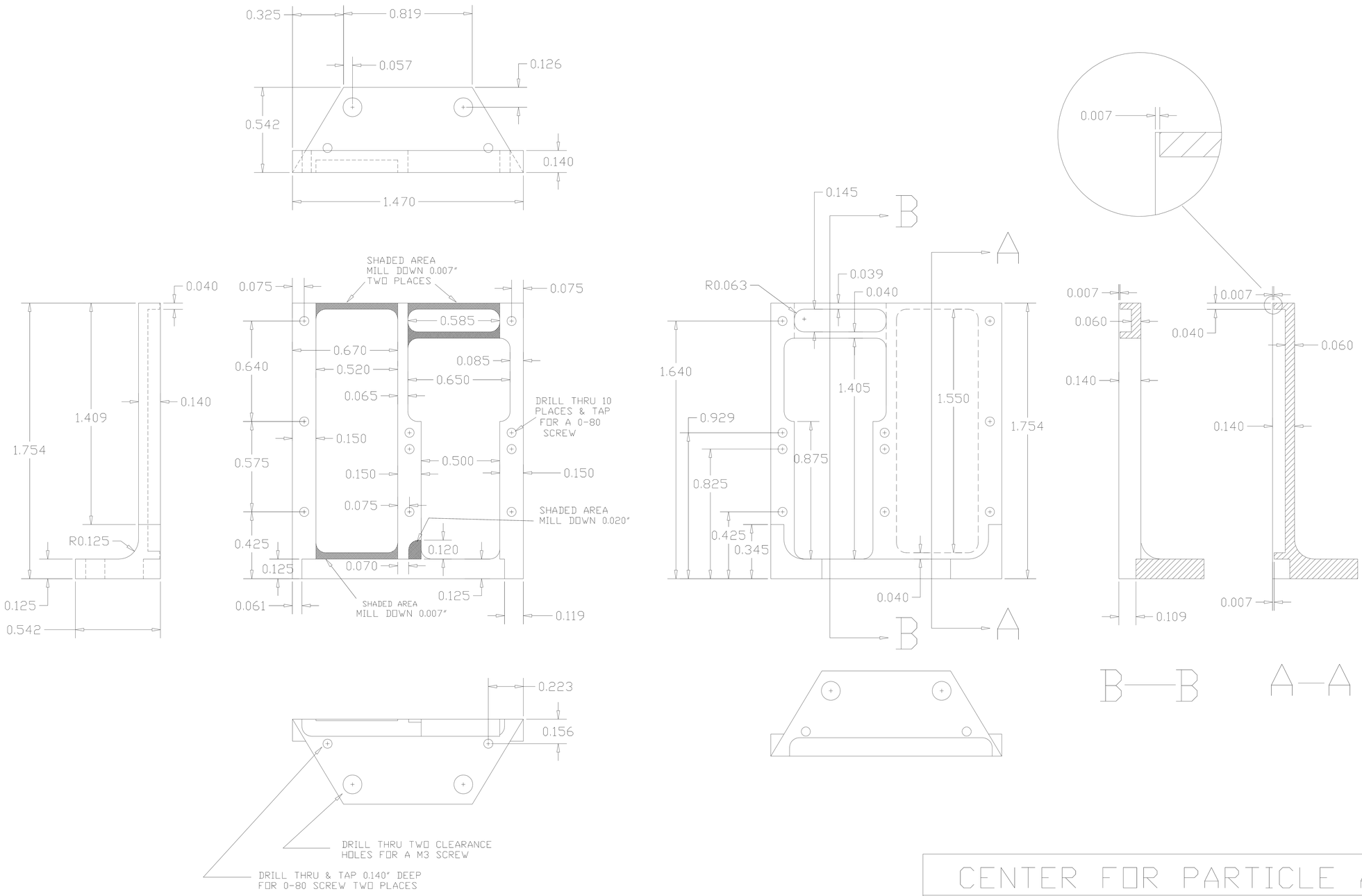

NOTE RAIDII ARE 0.063"
EXCEPT WHERE NOTED

CENTER FOR PARTICLE ASTROPHYSICS		
CRYOGENIC DARK MATTER SEARCH		
ZIP SQUET FET CARD GUSSET FAB DWG.		
17MAR02	REV ZC1	ZIP_FETCARD_GUSSET_REVC1.DWG
SCALE	TOLERANCE ± 0.003"	
MATERIAL-COUNTED COPPER		GARTH SMITH (510) 642-1067

EX:

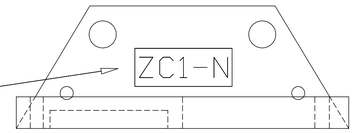

Befor etching engrave ID# in this location as shown:

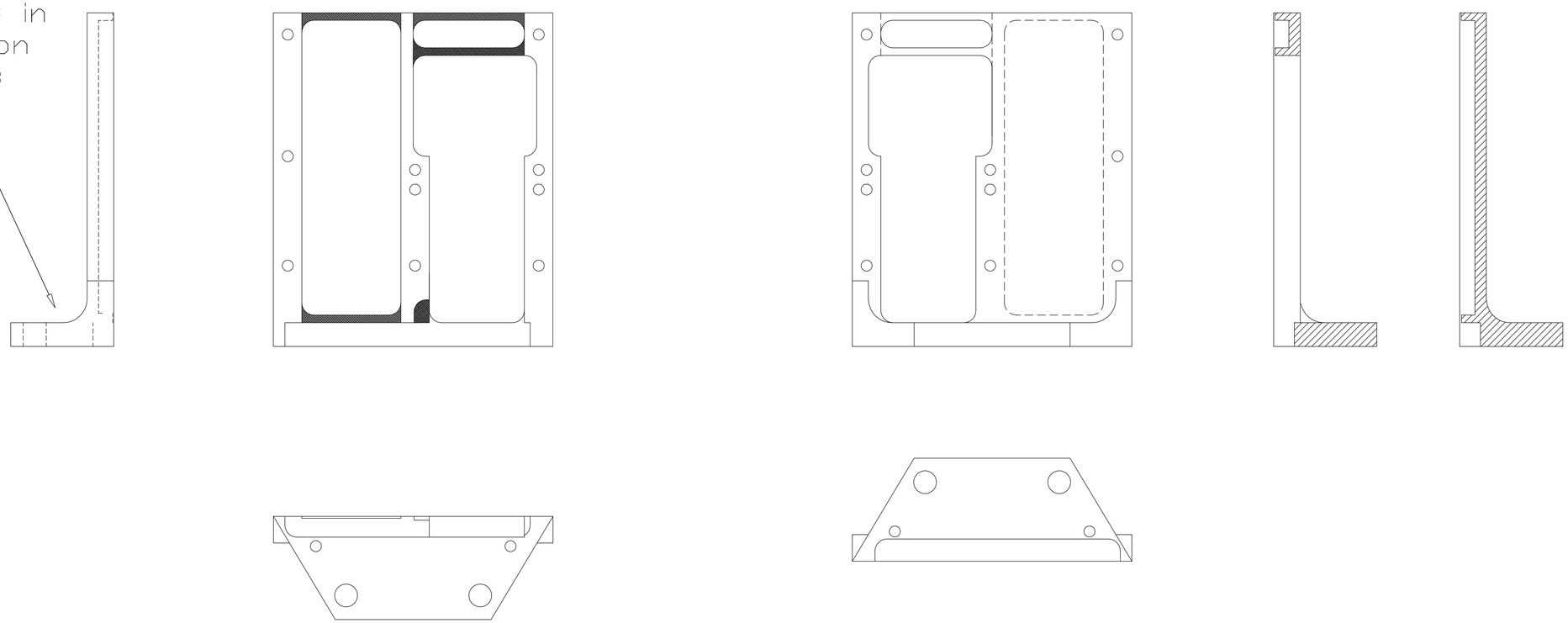

CENTER FOR PARTICLE ASTROPHYSICS		
CRYOGENIC DARK MATTER SEARCH		
ZIP SQUET FET CARD GUSSET ID DWG.		
17MAR02	REV ZC1	ZIP_FETCARD_GUSSET_REVC1.DWG
SCALE	TOLERANCE ± 0.003″	
MATERIAL-COUNTED COPPER		GARTH SMITH (510) 642-1067