Preliminary Design Layout of the SCDME Liquid Scintilator

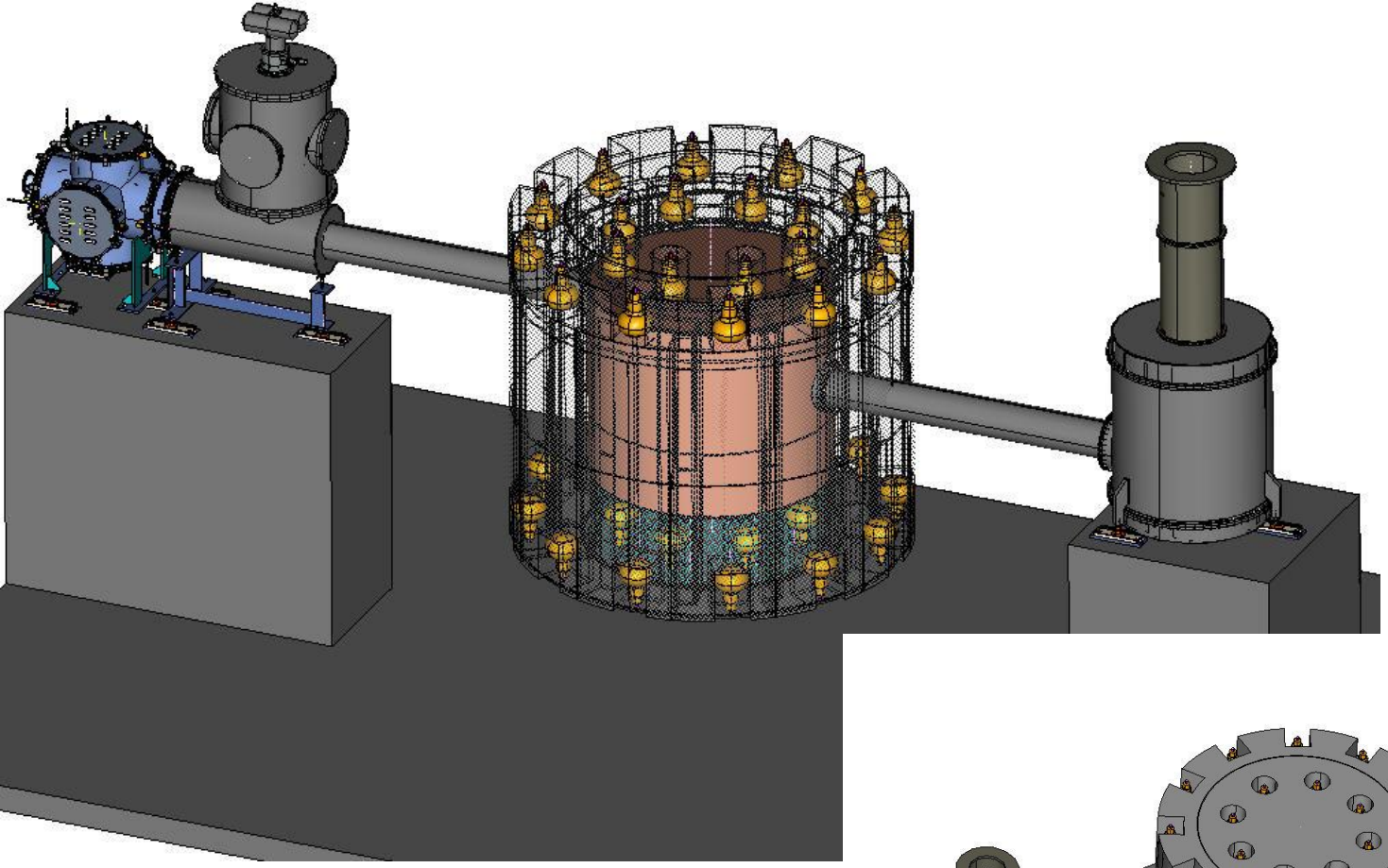

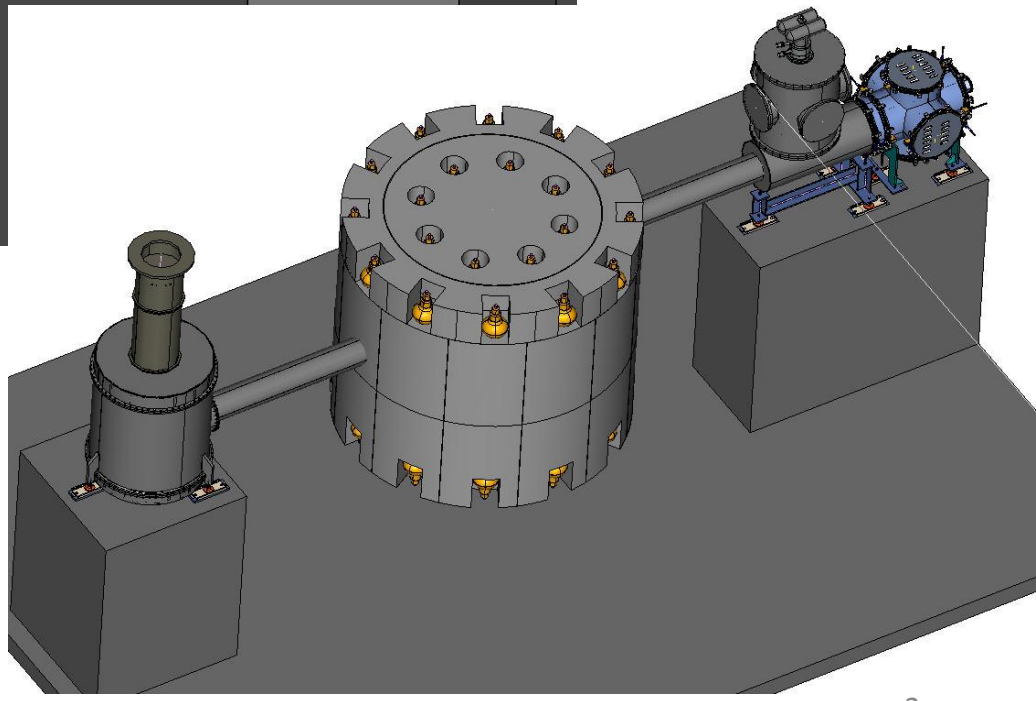

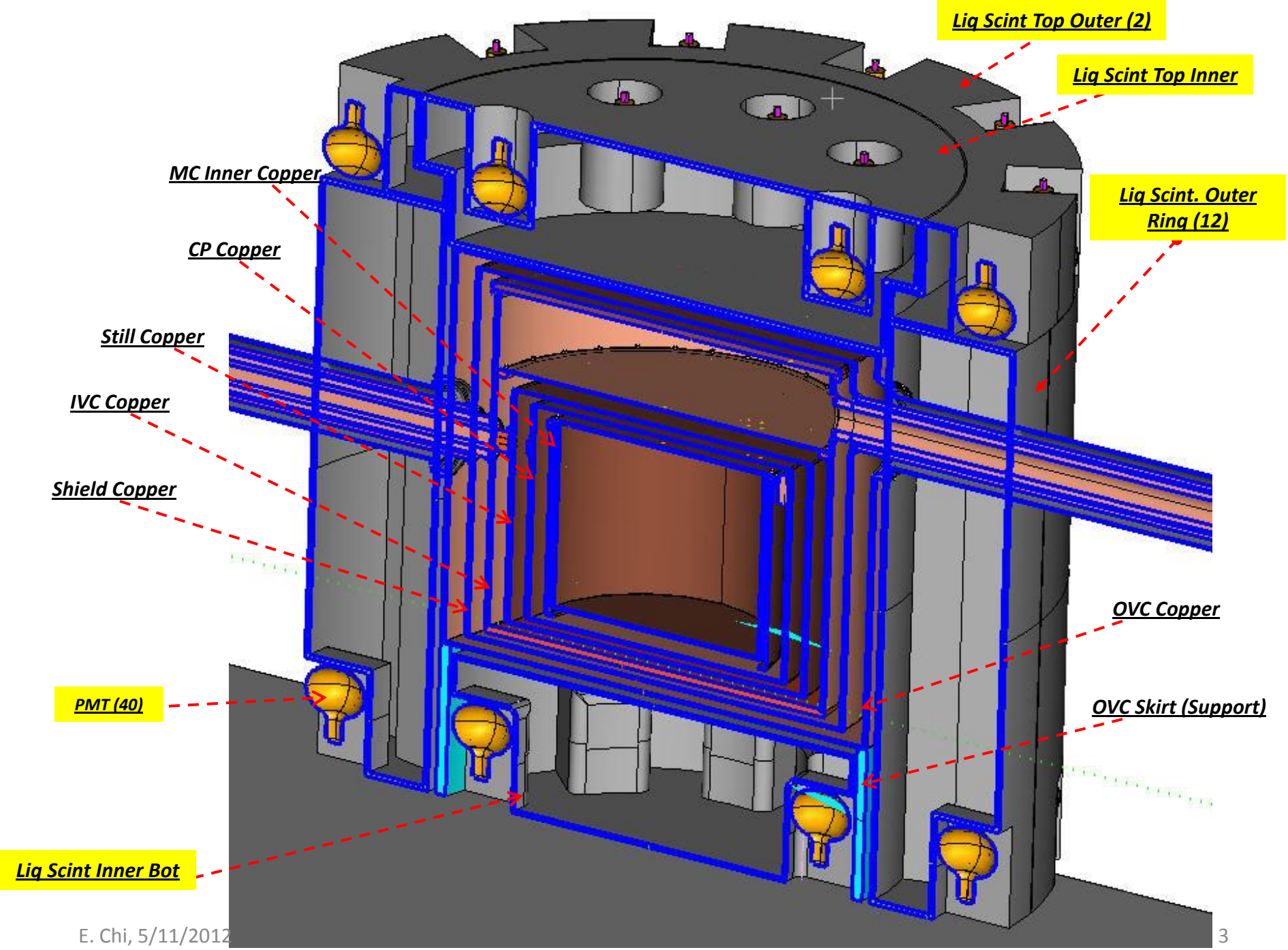
Liq Scint Top Outer (2)
Liq Scint Top Inner
MC Inner Copper
Liq Scint. Outer Ring (12)
CP Copper
Still Copper
IVC Copper
Shield Copper
OVC Copper
PMT (40)
OVC Skirt (Support)
Liq Scint Inner Bot

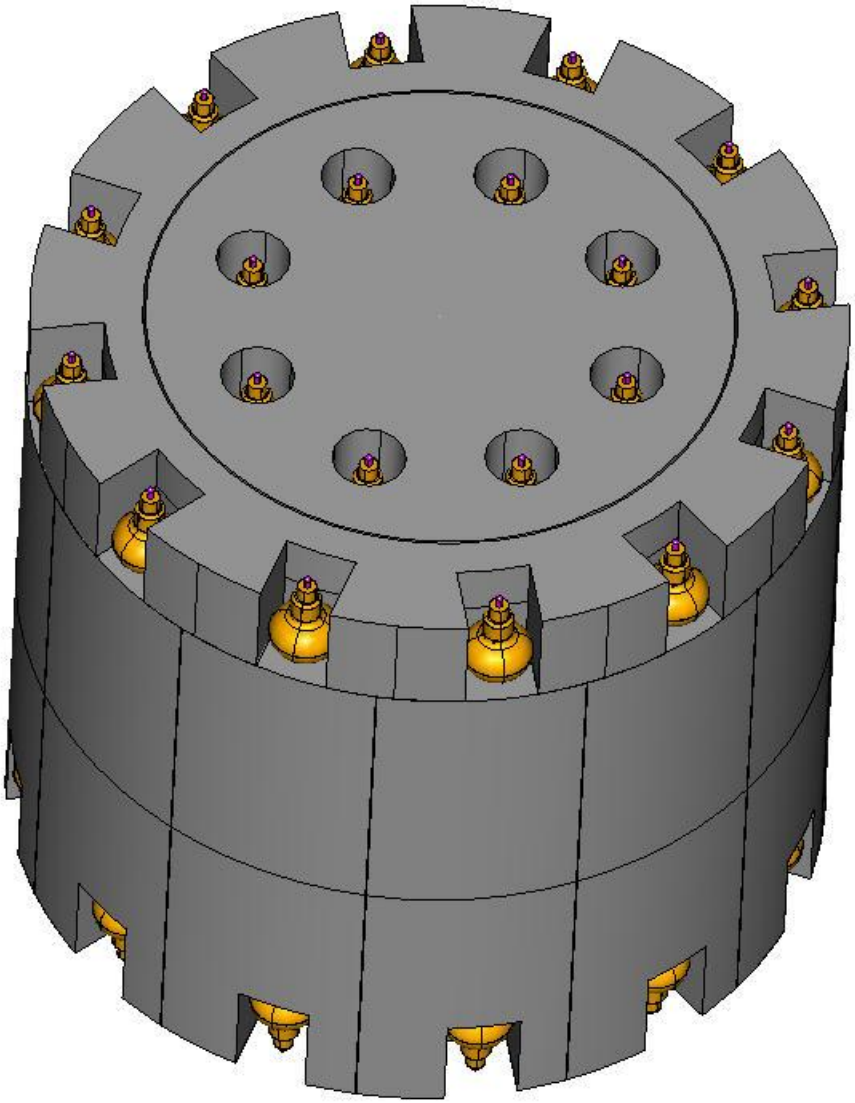

Overall Data:

Do = 88.25”, Di = 56.25”

Ho = 77.50”, Hi = 45.50”

Total weight: ~12,200 lbs.

Liq. Scintilator: ~10,000 lbs

Acrylic containers: ~ 2,145 lbs
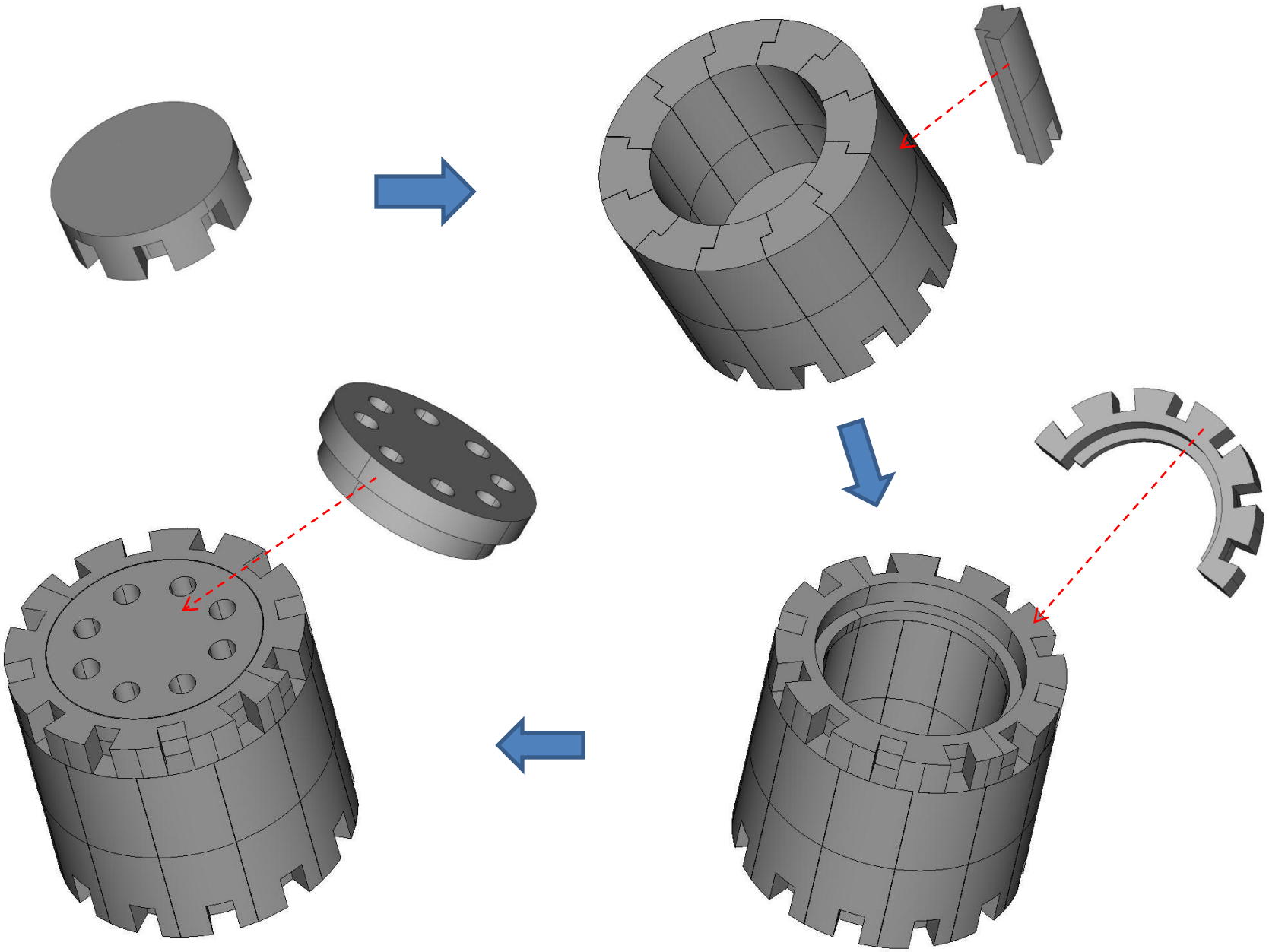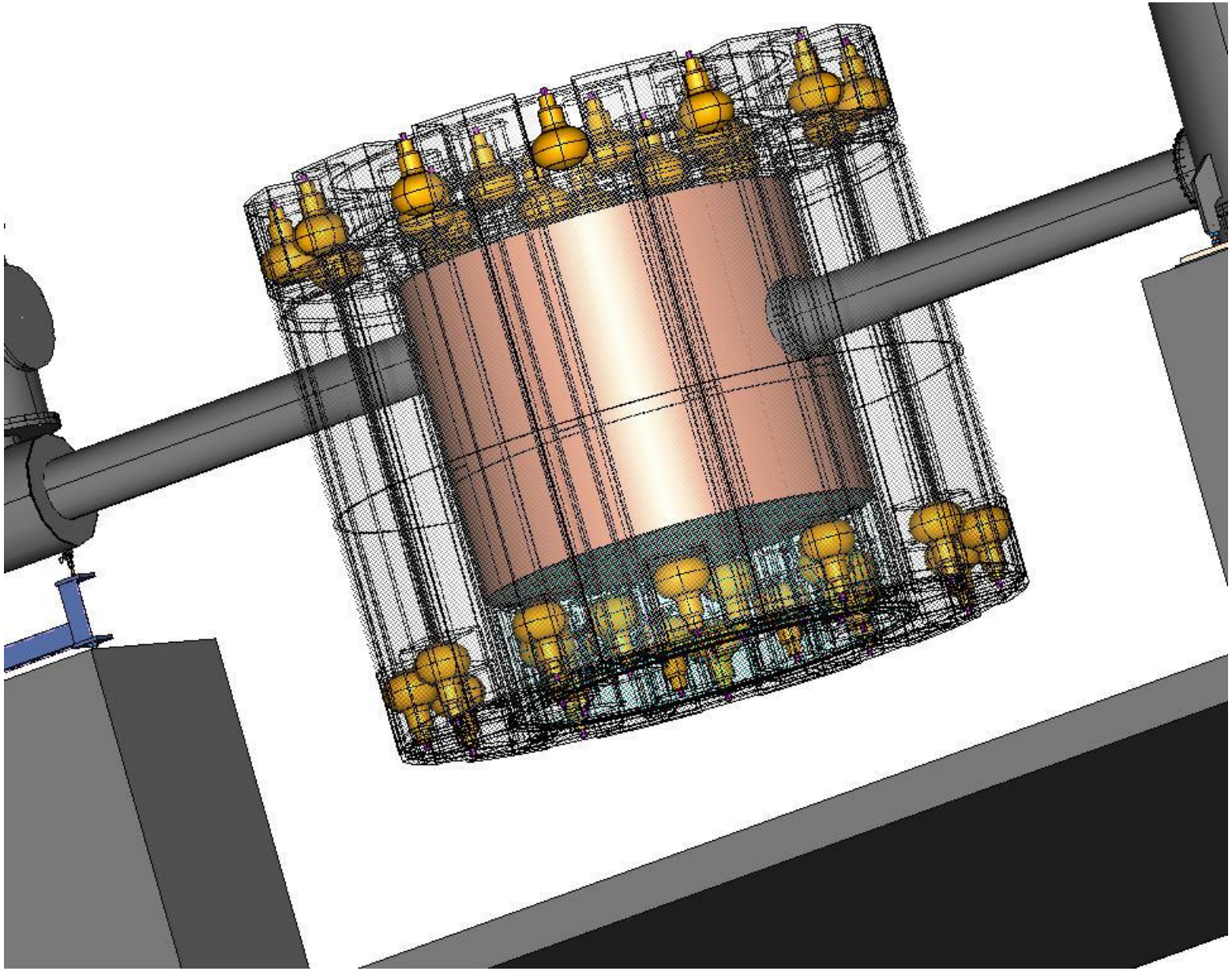
Number of PMT: 40