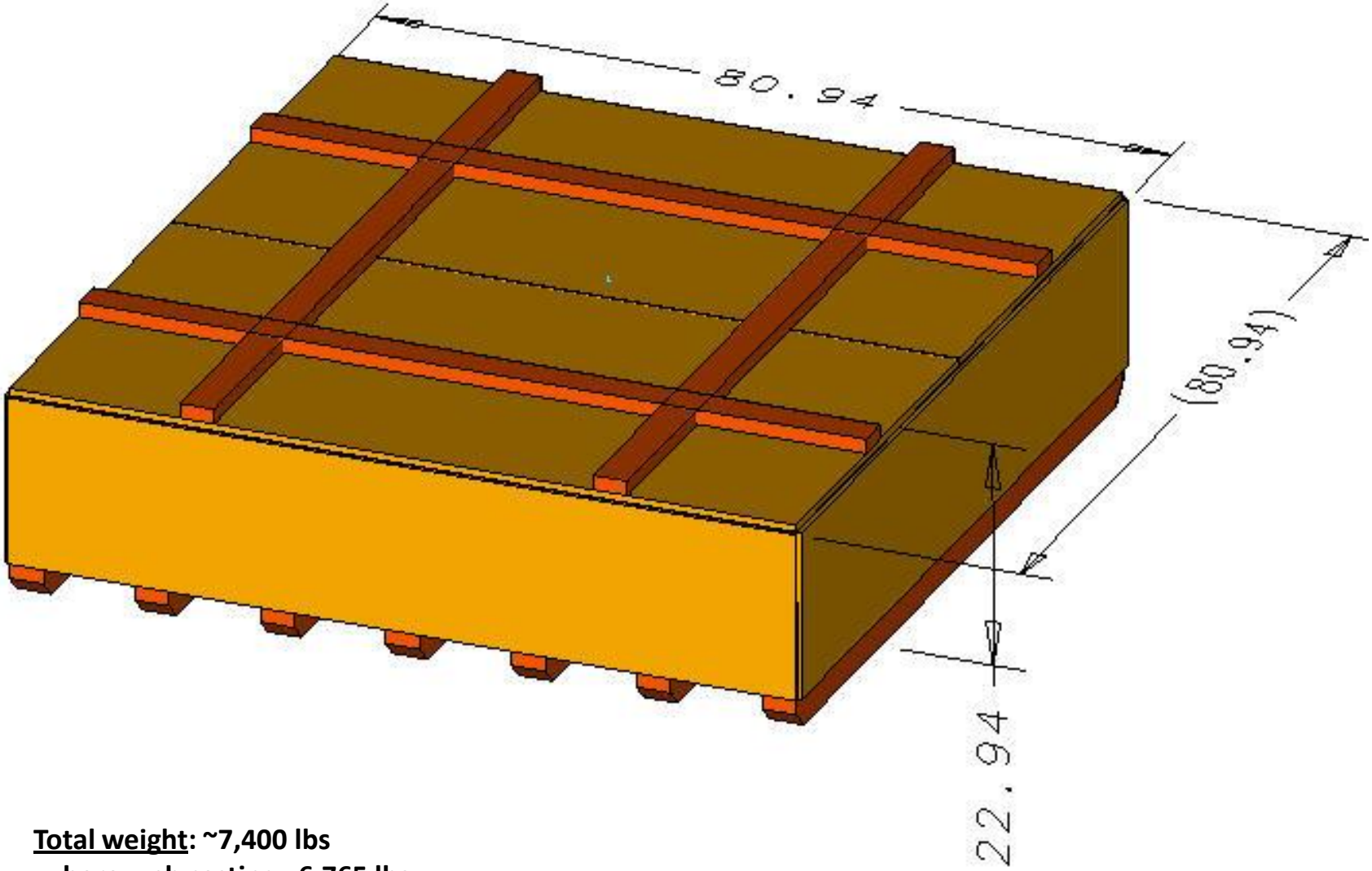

<u>Total weight</u>: ~7,400 lbs
where: pb casting: 6,765 lbs
Container: ~535 lbs

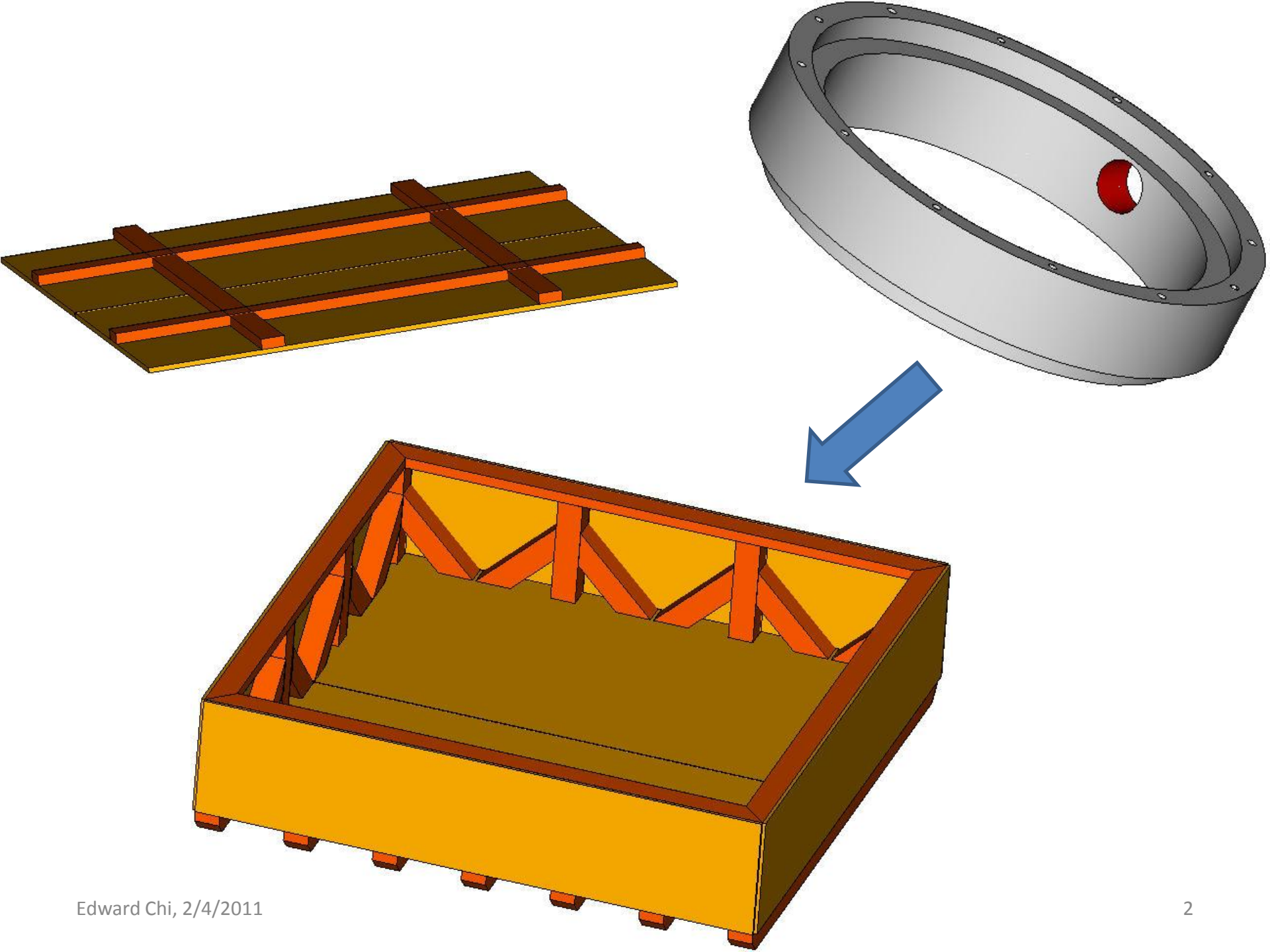

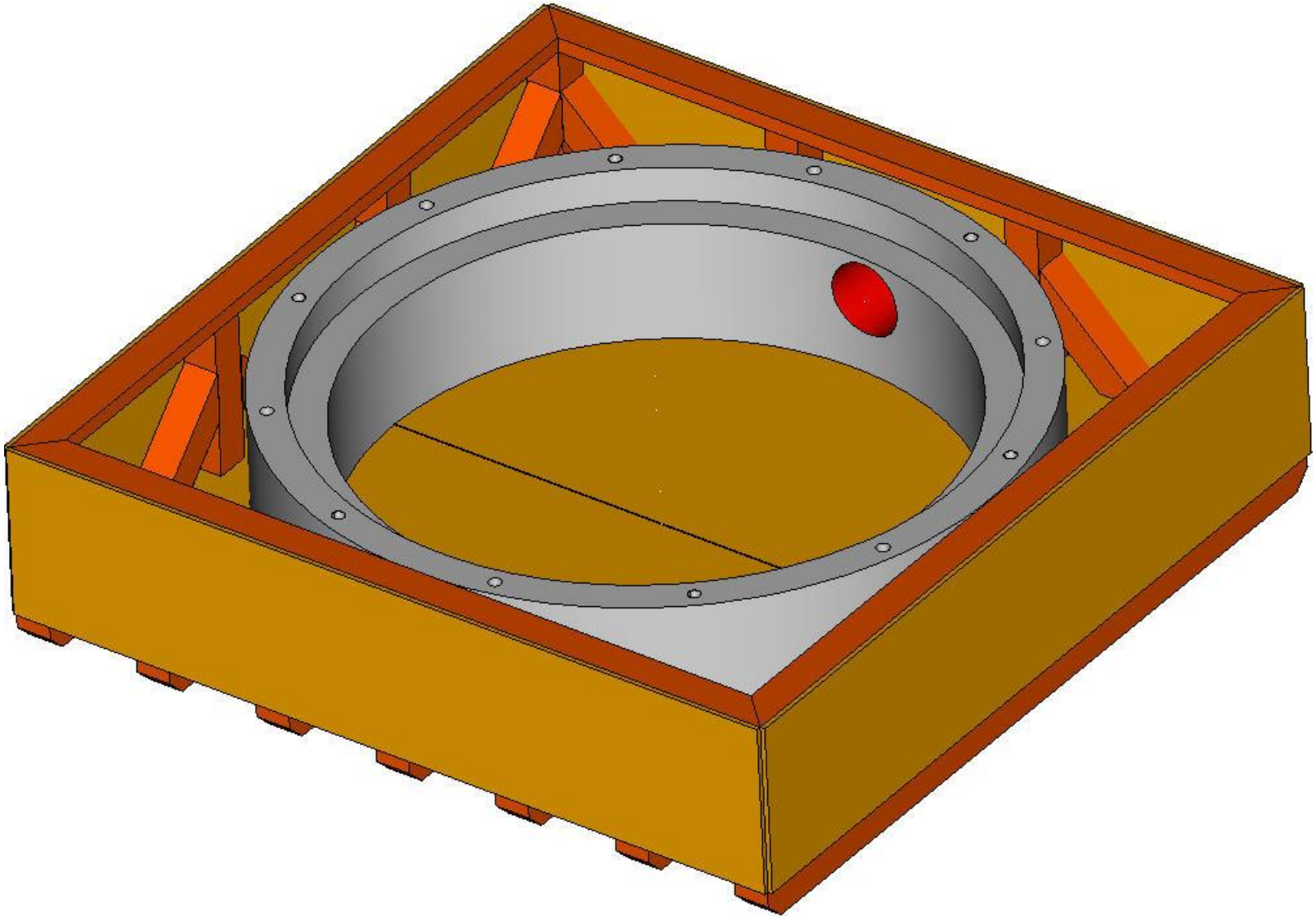

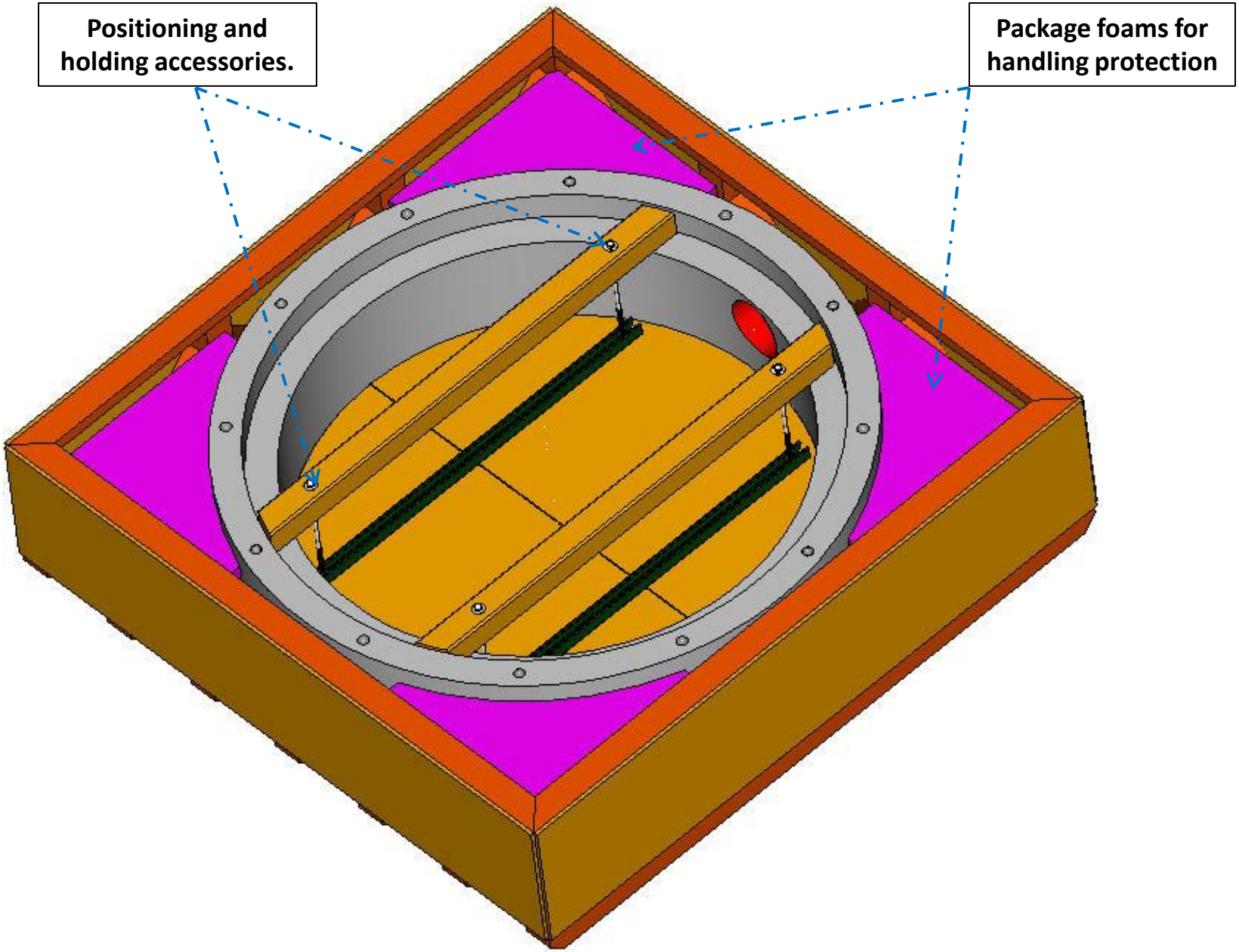
Positioning and holding accessories.
Package foams for handling protection