REV	DESCRIPTION	DRAWN	DATE
		APPROVED	DATE

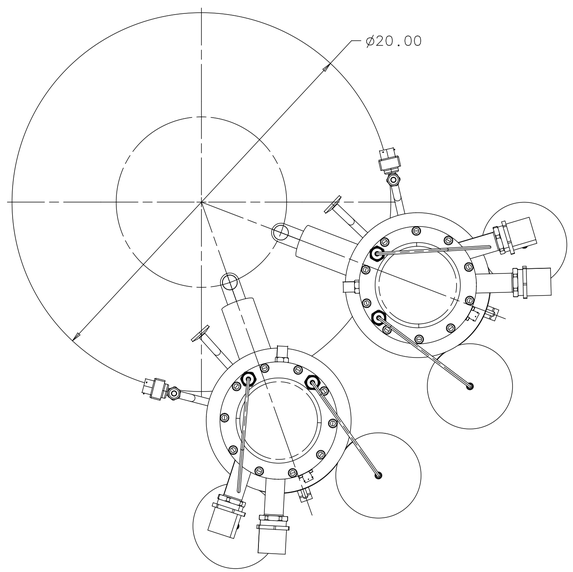

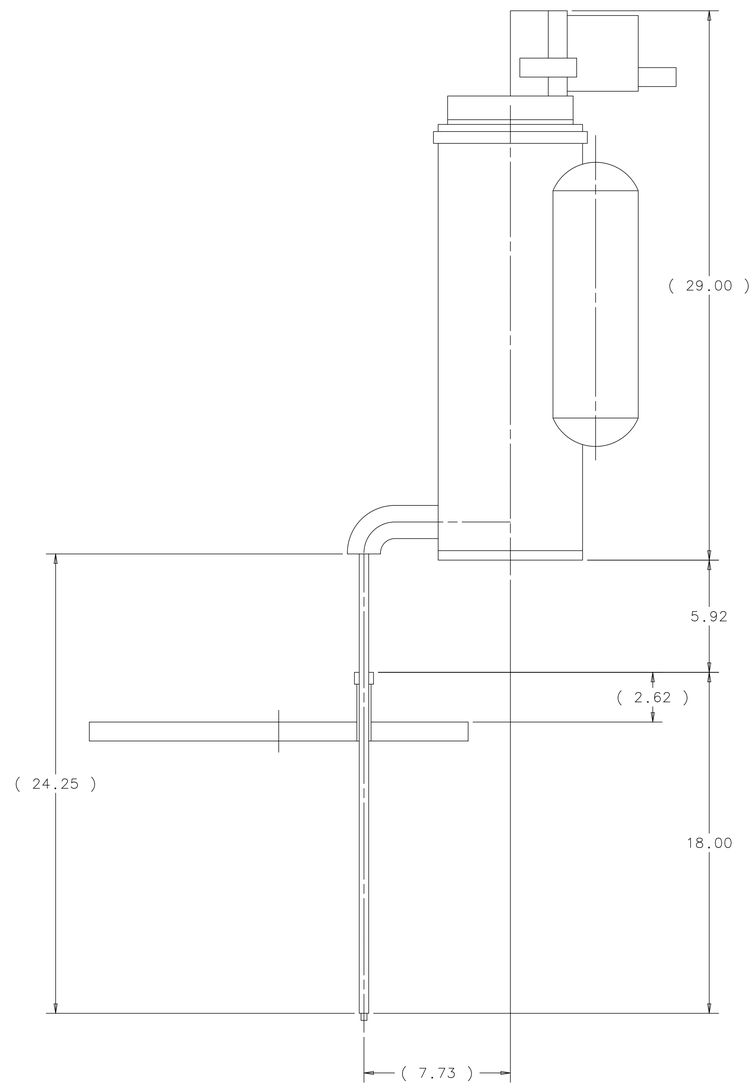

UNLESS OTHERWISE SPECIFIED			ORIGINATOR		
			DRAWN	B. CYKO	01-20-10
±	±	±	CHECKED		
1. BREAK ALL SHARP EDGES MAX.			APPROVED		
2. DO NOT SCALE DRAWING. 3. DIMENSIONS BASED UPON			USED ON		
4. MAX. ALL MACH. SURFACES ✓			MATERIAL		
5. DRAWING UNITS:					

FERMI NATIONAL ACCELERATOR LABORATORY
UNITED STATES DEPARTMENT OF ENERGY

SCALE	DRAWING NUMBER	SHEET	REV
1:4	. — —	1 OF 1	

CREATED WITH : GROUP: